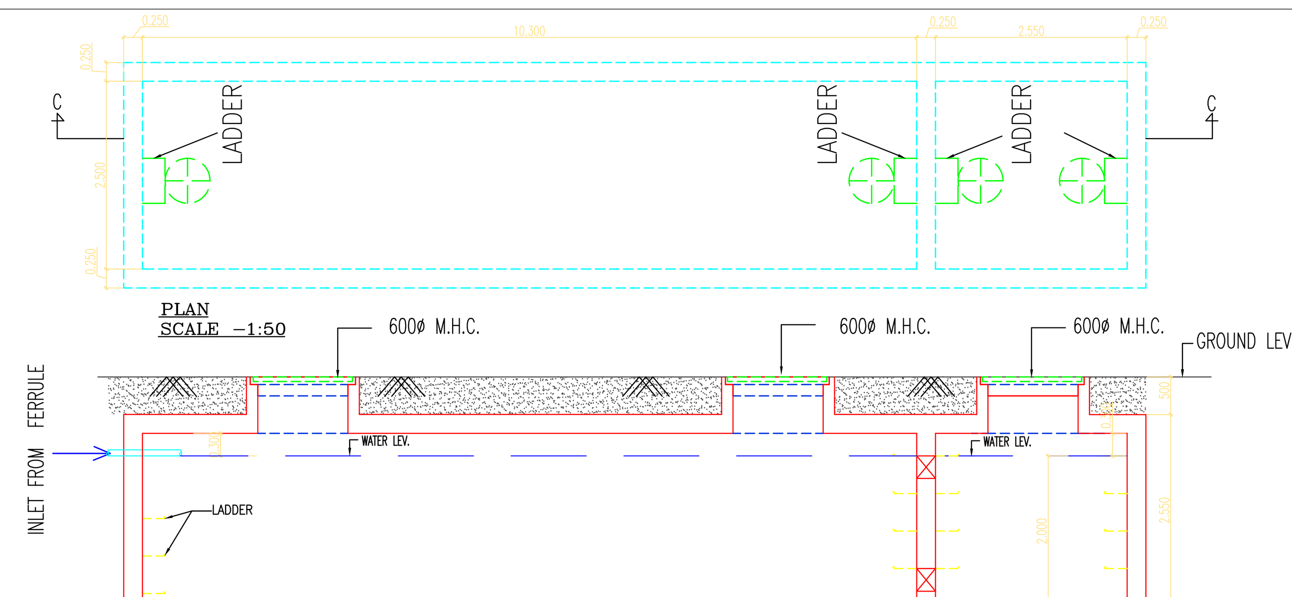

PLAN
SCALE -1:50

SECTION CC
SCALE -1:50

DETAIL OF UNDERGROUND WATER TANK
FOR FIRE
CAPACITY-50,000 LTRS.

DETAIL OF UNDERGROUND WATER TANK
FOR DOMESTIC
CAPACITY-12,000 LTRS.

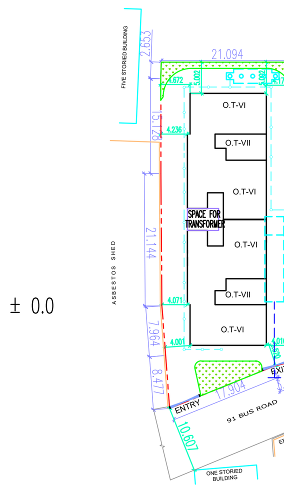

SITE PLAN
SCALE -1:600

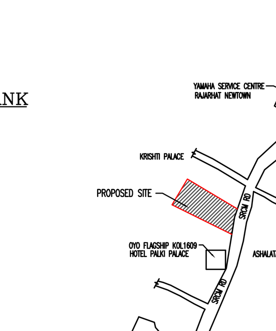

LOCATION PLAN
SCALE -1:4000

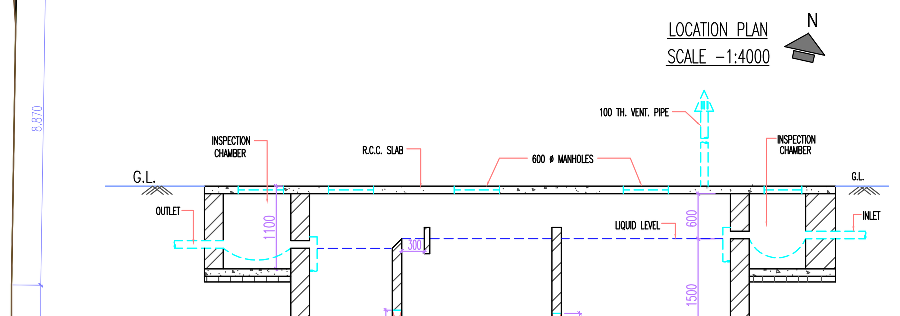

SECTION AT - YY
SCALE-1:50

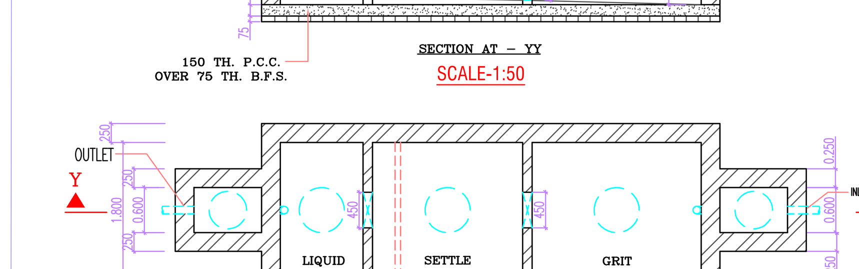

PLAN
DETAIL OF SEPTIC TANK (100 USERS)
SCALE-1:50

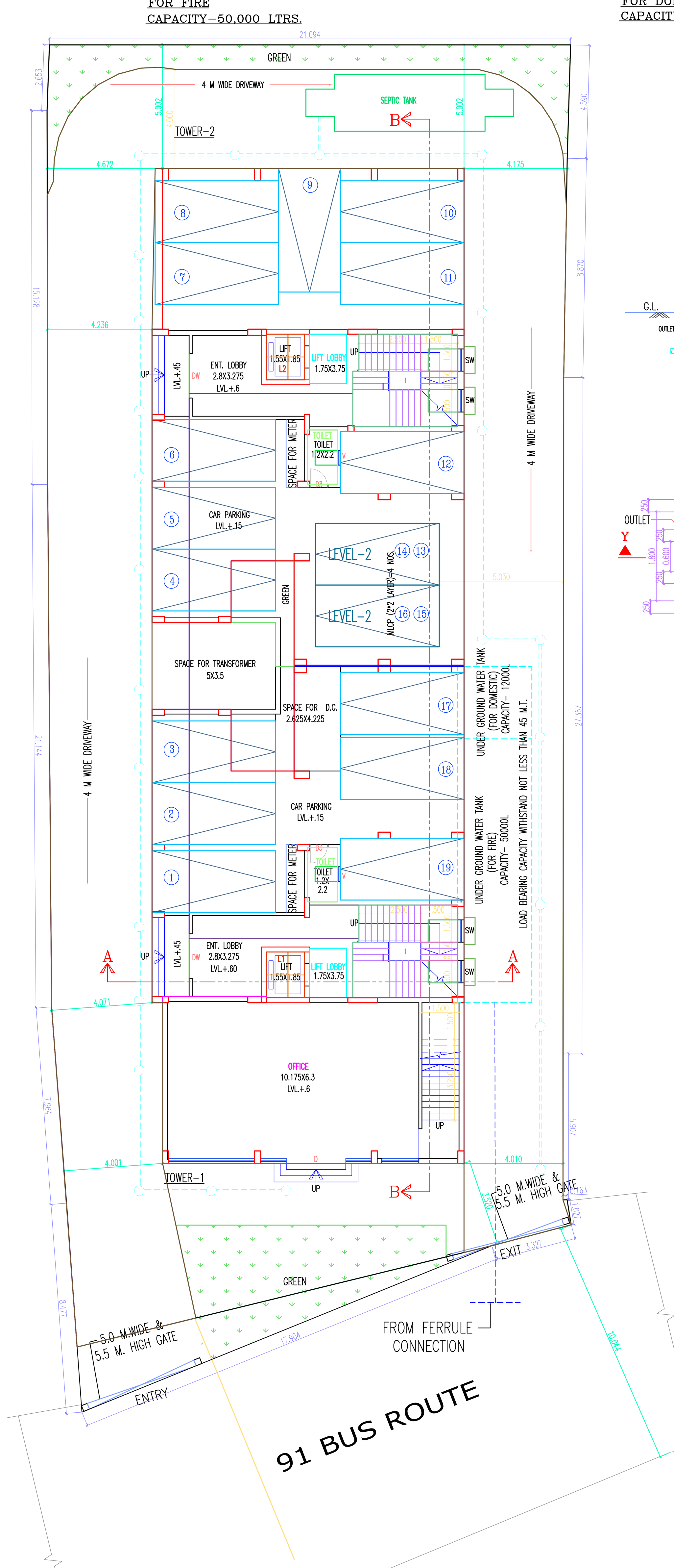

GROUND FLOOR PLAN
SCALE-1:100

AREA STATEMENT

AREA OF PLOT (26 DEC=15.6 K.)(AS PER RECORD)	=1043.478 SQM.
AREA OF PLOT (AS PER SITE)	=1043.478 SQM.
AVAILABLE ROAD WIDTH	= ABOVE 10.0 MT.
PROPOSED BUILDING HT. (0.6+4.1+3.05*5 FLS.)	= 19.95 MT.
PERMISSIBLE F. A. R.	= 2.25
PERMISSIBLE BUILT UP AREA (1043.478*2.25)	= 2347.825 SQM.
PERMISSIBLE GROUND COVERAGE (50%)	= 521.739 SQM.
PROPOSED GROUND COVERAGE (44.99%)	= 469.41 SQM.

TOWER-1

PROPOSED GROUND FLOOR AREA	=234.71 SQM.
PROPOSED 1ST FLOOR AREA	=231.84 SQM.
PROPOSED 2ND TO 5TH FLOOR AREA	=231.84 SQM.
PROPOSED TOTAL FLOOR AREA (234.71+231.84+231.84*4 FLS.)	=1393.91 SQM.

TOWER-2

PROPOSED GROUND FLOOR AREA	=234.71 SQM.
PROPOSED 1ST TO 5TH FLOOR AREA	=231.84 SQM.
PROPOSED TOTAL FLOOR AREA (234.71+231.84*5 FLS.)	=1393.91 SQM.
PROPOSED TOTAL BUILT UP AREA (1393.91+1393.91)	=2787.82 SQM.
ADDITIONAL O.H.W.R. AREA (19.50+6.64)	=26.14 SQM.
ADDITIONAL CUPBOARD AREA (19.83+22.10)	=41.93 SQM.

EXEMPTION

STAIR AREA (15*2*6 FLS.)+13.20	=193.20 SQM.
LIFT LOBBY AREA (3*2*6 FLS.)	=36.0 SQM.
PARKING AREA AT GR. FLOOR (134.19+216.14)	=350.33 SQM.
PROPOSED TOTAL FLOOR AREA FOR FAR 2787.82-(193.20+36.0+350.33)	=2208.29 SQM.
PROPOSED FAR (2208.29/1043.478)	=2.116

CAR PARKING CALCULATION (AS PER RULE)

TOTAL OFFICE AREA (81.11+68.54)	=149.65 SQM.
NO OF PARKING REQD. FOR OFFICE	=1 NO.
TOTAL RESIDENTIAL AREA (2268.21-149.65)	=2118.56 SQM.
NO OF PARKING REQD. FOR RESIDENTIAL (1NO. PARKING@120 SQM.)	=17.65 SAY 18 NOS.
TOTAL NO OF PARKING REQD. AS PER RULE(1+18)	=19 NOS.
TOTAL NO OF PARKING PROVIDED (COV. SINGLE=15 NOS. & COV. MLCP=2*2=4 NOS.)	=19 NOS.
REQD. TREE COVER AREA (6.92%)	=72.21 SQM.
PRO. TREE COVER AREA (6.95%)	=72.50 SQM.

FLAT CALCULATION

2BHK FLAT	=10 NOS.
3BHK FLAT	=19 NOS.
TOTAL NO. OF FLAT	=29 NOS.

SCHEDULE OF DOORS & WINDOWS

TYPE	SILL	LINTEL	SIZE	TYPE	SILL	LINTEL	SIZE
D	–	2400	2400X2400	W1	900	2100	1500X1200
D1	–	2100	1100X2100	W2	900	2100	1200X1200
D2	–	2100	900X2100	W3	900	2100	900X1200
D3	–	2100	750X2100	WK	1200	2100	900X900
DW	–	2100	1800X2100	WK1	1200	2100	750X900
				SW	900	2100	900X1200
				V	900	2100	900X1200

SPECIFICATION OF BUILDING

1. R.C.C. FRAME STRUCTURE WITH CONC. GRADE 1:1.5:3.
2. 200 M.M. THK. EXTERNAL 125 & 75 M.M. THK. INTERNAL WALLS WITH 1:4 CEMENT MORTER JOINTS.
3. STEEL Z- SECTION WINDOWS.
4. CAST-IN-SITU MOSAIC FLOORING.
5. 1:6 & 1:4 CEMENT PLASTER ON INTERNAL WALLS AND CEILING RESPECTIVELY.
6. WATER PROOFING TREATMENT.
7. P.O.P. PUNNING ON INTERNAL WALLS & CEILING.
8. ALL CUPBOARD WIDTH IS 500.

CERTIFICATE OF OWNER

1. I ENGAGE ARCHITECT AND E.S.E DURING CONSTRUCTION
2. I SHALL FOLLOW THE INSTUCTIONS OF ARCHITECT AND E.S.E DURING CONSTRUCTION OF THE BUILDING..
3. K.M.C AUTHORITY WILL NOT BE RESPONSIBLE FOR STRUCTURE STABILITYOF BUILDING AND ADJOINING STRUCTURE.
4. IF ANY SUBMITED DOCUMENT IS FOUND TO BE FAKE THE K.M.C AUTHORITY MAY REVOKE THE SANCTION PLAN.
5. THE CONSTUCTION OF WATER RESERVOIR EXECUTED UNDER THE GUIDENCE OF ARCHITECT & E.S.E

SIGNATURE OF OWNER

IT IS CERTIFIED THAT THE COMPREHENSIVE GEO-TECHNICAL REPORT ON SOIL INVESTIGATION HAS BEEN PREPARED BY ME FOR DESIGN AND CALCULATION OF THE FOUNDATION BY ANALYZING THE SOIL SAMPLE FOR ESTIMATING THE BEARING CAPACITY OF THE SOIL ON WHICH FOUNDATION OF THE STRUCTURE WILL BE CONSTRUCTED.
I SHALL ALSO CHECK THE NATURE OF THE SOIL AFTER EXCAVATION AT SITE SO THAT FOUNDATION IS EXTENDED UP TO APPROPRIATE DEPTH THAT HAS BEEN PROPOSED IN THE GEO-TECHNICAL REPORT.

SIGNATURE OF GEO-TECHNICAL ENGINEER

CERTIFICATE OF STRUCTURAL ENGINEER

CERTIFIED THAT, "THE STRUCTURAL DESIGN & DRAWINGS OF BOTH FOUNDATION & SUPER STRUCTURE OF THE BUILDING HAS BEEN MADE BY ME CONSIDERING ALL POSSIBLE LOADS INCLUDING THE SEISMIC LOAD AS PER THE NATIONAL BUILDING CODE OF INDIA & CERTIFIED THAT IT IS SAFE & STABLE IN ALL RESPECTS".

THE REPORT OF SOIL TEST DONE BY GEOTEST ENGINEERS PVT. LIMITED. 6A MILAN PARK. KOLKATA – 700084.

SIGNATURE OF STRUCTURAL ENGINEER

CERTIFICATE OF ARCHITECT

THE L.B.A. HAS CERTIFIED ON THE PLAN ITSELF WITH FULL RESPONSIBILITY THAT THE BUILDING PLAN HAS BEEN DRAWN UP AS PER PROVISION OF K.M.C. BLDG. RULES 2009, AS AMENDED FROM TIME TO TIME AND THAT THE SITE CONDITION INCLUDING THE WIDTH OF THE ABUTTING ROAD CONFIRM WITH THE PLAN AND IT IS A BUILD ABLE SITE AND NOT A TANK OR A FILLED UP TANK.

SIGNATURE OF ARCHITECT

TITLE

GROUND FLOOR PLAN, SEPTIC TANK DETAIL, UGR DETAIL, SITE PLAN, LOCATION PLAN

PROJECT

PROPOSED G+V STORIED (19.95M) RESIDENTIAL BUILDING AT MOUZA-GOPALPUR, TENTULTALA, L.R. DAG NOS. 2286 (P) AND 2287 (P), P.O.-RAJARHAT GOPALPUR, P.S.-NARAYANPUR (PREVIOUSLY AIRPORT), NORTH 24 PARGANAS, KOLKATA 700136, WARD NO.-4, BIDHANNAGAR MUNICIPAL CORPORATION.

DATE	JOB. NO.	DEALT	CHECKED	SHEET NO.
14.12.22	ARCH/751/2022	JAY	MITHUN	1 OF 2

SCALE- 1:100,50, 600,4000

ARCHITECT

RAJ AGRAWAL & ASSOCIATES
8B, ROYD STREET,KOLKATA – 16

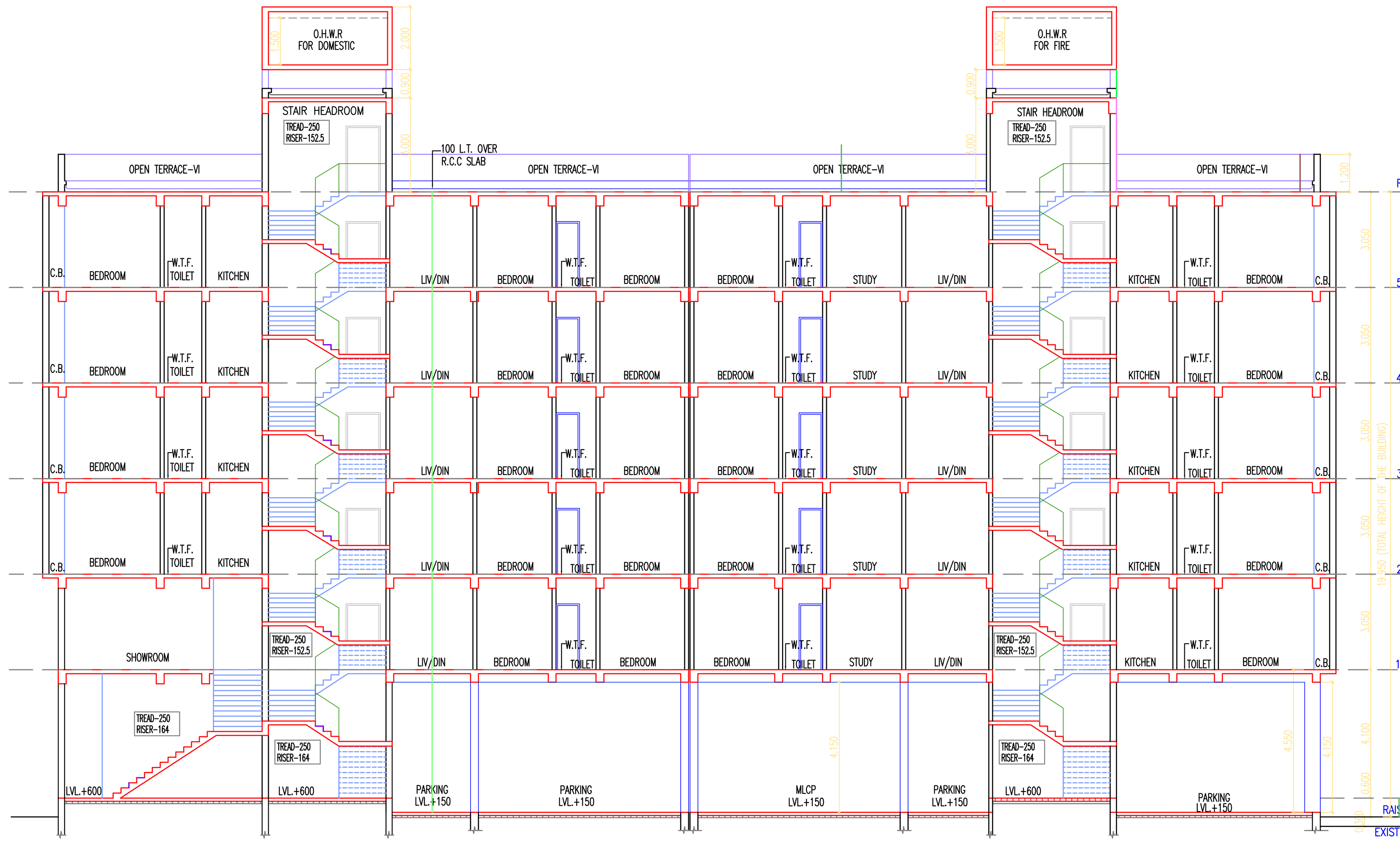

SECTION-BB

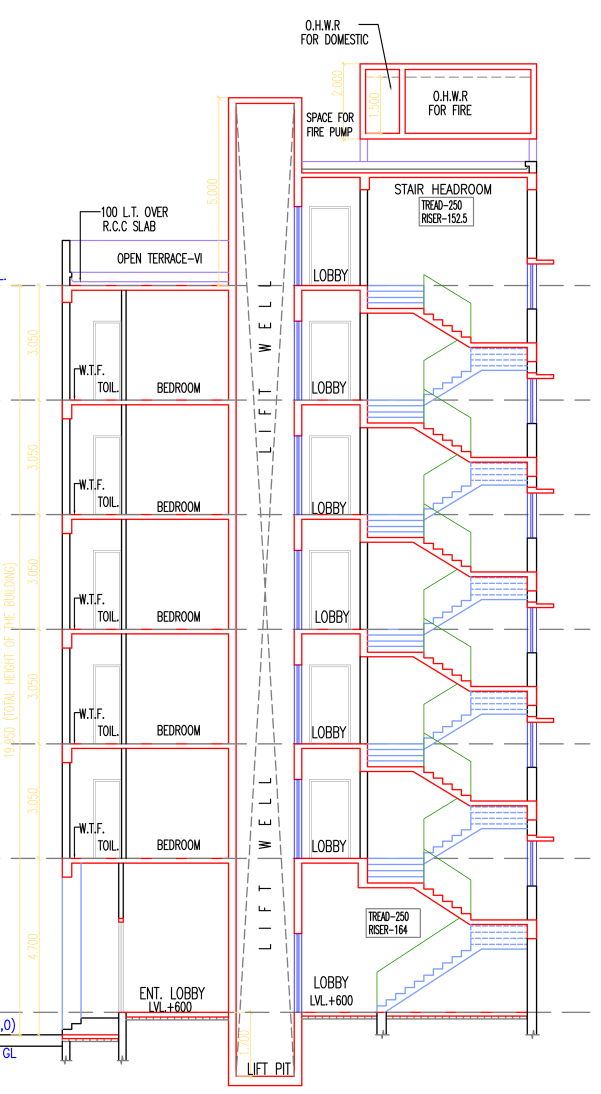

SECTION-A-A

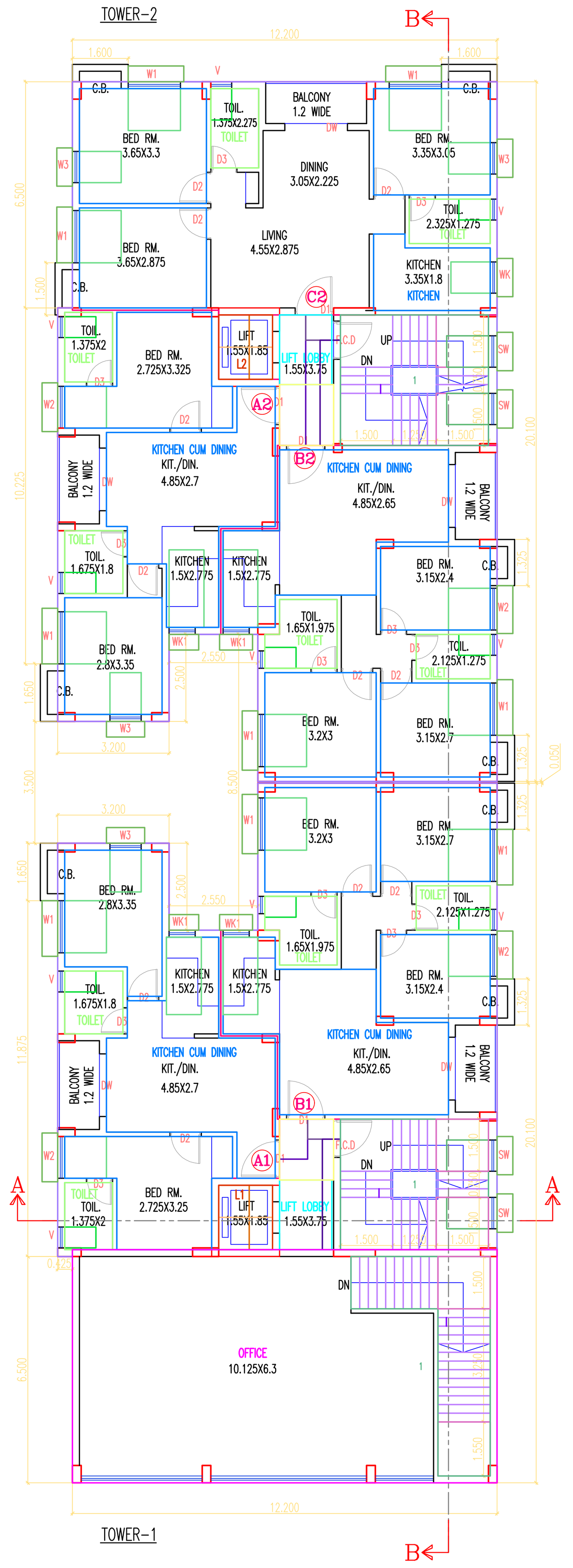

FLOOR-01

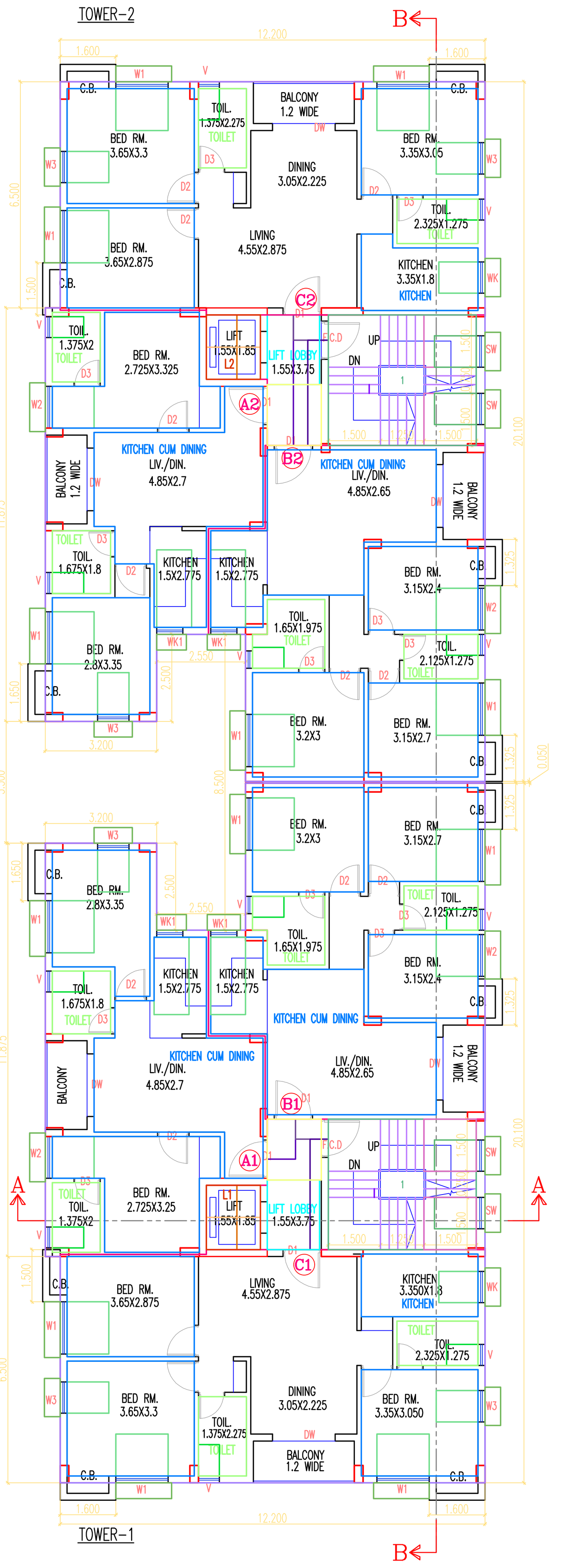

FLOOR02,FLOOR03,FLOOR04,FLOOR05-TYPICAL

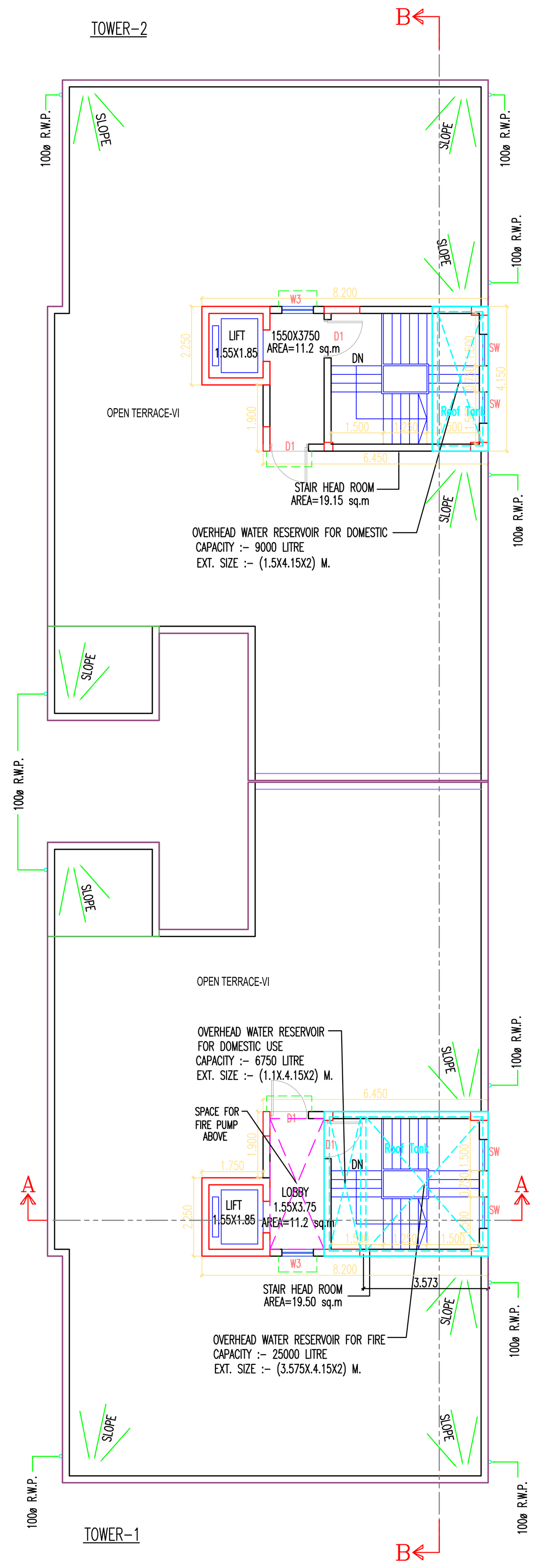

FLOOR-TERRACE

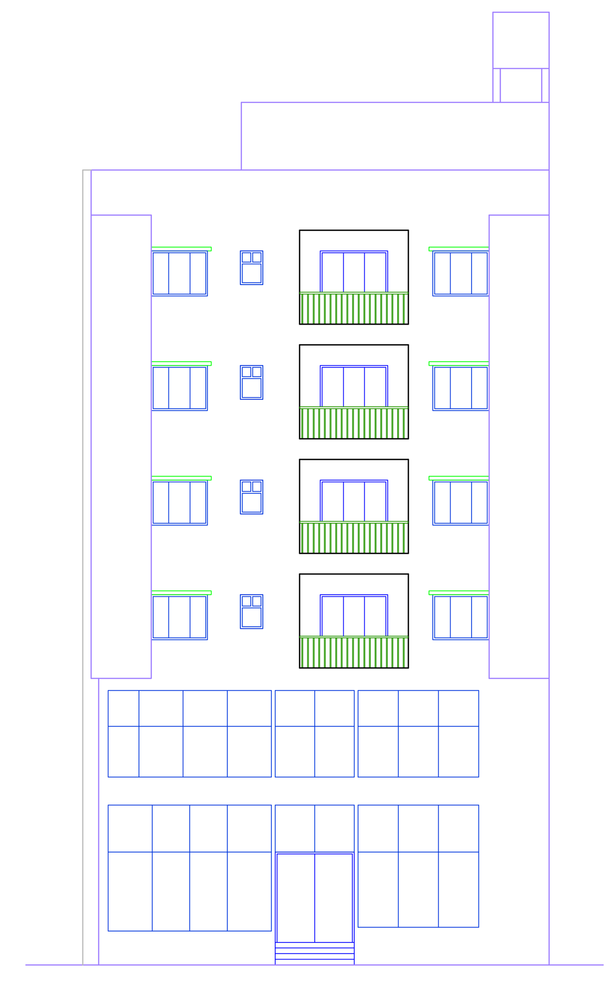

FRONT ELEVATION

SCHEDULE OF DOORS & WINDOWS

TYPE	SILL	LINTEL	SIZE	TYPE	SILL	LINTEL	SIZE
D	–	2400	2400X2400	W1	900	2100	1500X1200
D1	–	2100	1100X2100	W2	900	2100	1200X1200
D2	–	2100	900X2100	W3	900	2100	900X1200
D3	–	2100	750X2100	WK	1200	2100	900X900
DW	–	2100	1800X2100	WK1	1200	2100	750X900
				SW	900	2100	900X1200
				V	900	2100	900X1200

SPECIFICATION OF BUILDING

1. R.C.C. FRAME STRUCTURE WITH CONC. GRADE 1:1.5:3.
2. 200 M.M. THK. EXTERNAL 125 & 75 M.M. THK. INTERNAL WALLS WITH 1:4 CEMENT MORTER JOINTS.
3. STEEL Z- SECTION WINDOWS.
4. CAST-IN-SITU MOSAIC FLOORING.
5. 1:6 & 1:4 CEMENT PLASTER ON INTERNAL WALLS AND CEILING RESPECTIVELY.
6. WATER PROOFING TREATMENT.
7. P.O.P. PUNNING ON INTERNAL WALLS & CEILING.
8. ALL CUPBOARD WIDTH IS 500.

CERTIFICATE OF OWNER

1. I ENGAGE ARCHITECT AND E.S.E DURING CONSTRUCTION
2. I SHALL FOLLOW THE INSTUCTIONS OF ARCHITECT AND E.S.E DURING CONSTRUCTION OF THE BUILDING..
3. K.M.C AUTHORITY WILL NOT BE RESPONSIBLE FOR STRUCTURE STABILITYOF BUILDING AND ADJOINING STRUCTURE.
4. IF ANY SUBMITED DOCUMENT IS FOUND TO BE FAKE THE K.M.C AUTHORITY MAY REVOKE THE SANCTION PLAN.
5. THE CONSTUCTION OF WATER RESERVOIR EXECUTED UNDER THE GUIDENCE OF ARCHITECT & E.S.E

SIGNATURE OF OWNER

IT IS CERTIFIED THAT THE COMPREHENSIVE GEO-TECHNICAL REPORT ON SOIL INVESTIGATION HAS BEEN PREPARED BY ME FOR DESIGN AND CALCULATION OF THE FOUNDATION BY ANALYZING THE SOIL SAMPLE FOR ESTIMATING THE BEARING CAPACITY OF THE SOIL ON WHICH FOUNDATION OF THE STRUCTURE WILL BE CONSTRUCTED.
I SHALL ALSO CHECK THE NATURE OF THE SOIL AFTER EXCAVATION AT SITE SO THAT FOUNDATION IS EXTENDED UP TO APPROPRIATE DEPTH THAT HAS BEEN PROPOSED IN THE GEO-TECHNICAL REPORT.

SIGNATURE OF GEO-TECHNICAL ENGINEER

CERTIFICATE OF STRUCTURAL ENGINEER

CERTIFIED THAT, "THE STRUCTURAL DESIGN & DRAWINGS OF BOTH FOUNDATION & SUPER STRUCTURE OF THE BUILDING HAS BEEN MADE BY ME CONSIDERING ALL POSSIBLE LOADS INCLUDING THE SEISMIC LOAD AS PER THE NATIONAL BUILDING CODE OF INDIA & CERTIFIED THAT IT IS SAFE & STABLE IN ALL RESPECTS".

THE REPORT OF SOIL TEST DONE BY GEOTEST ENGINEERS PVT. LIMITED. 6A MILAN PARK. KOLKATA – 700084.

SIGNATURE OF STRUCTURAL ENGINEER

CERTIFICATE OF ARCHITECT

THE L.B.A. HAS CERTIFIED ON THE PLAN ITSELF WITH FULL RESPONSIBILITY THAT THE BUILDING PLAN HAS BEEN DRAWN UP AS PER PROVISION OF K.M.C. BLDG. RULES 2009, AS AMENDED FROM TIME TO TIME AND THAT THE SITE CONDITION INCLUDING THE WIDTH OF THE ABUTTING ROAD CONFIRM WITH THE PLAN AND IT IS A BUILD ABLE SITE AND NOT A TANK OR A FILLED UP TANK.

SIGNATURE OF ARCHITECT

TITLE

FIRST FLOOR PLAN , TYPICAL FLOOR PLAN , ROOF PLAN , SECTION AA & BB , FRONT ELEVATION

PROJECT

PROPOSED G+V STORIED (19.95M) RESIDENTIAL BUILDING AT MOUZA-GOPALPUR, TENTULTALA, L.R. DAG NOS. 2286 (P) AND 2287 (P), P.O.-RAJARHAT GOPALPUR, P.S.-NARAYANPUR (PREVIOUSLY AIRPORT), NORTH 24 PARGANAS, KOLKATA 700136, WARD NO.-4, BIDHANNAGAR MUNICIPAL CORPORATION.

DATE	JOB. NO.	DEALT	CHECKED	SHEET NO.
14.12.22	ARCH/751/2022	JAY	MITHUN	2 OF 2

SCALE- 1:100

ARCHITECT

RAJ AGRAWAL & ASSOCIATES
8B, ROYD STREET,KOLKATA – 16

Signature Not Verified
Digitally Signed.
Name: Sujay Sarkar
Date: 30-Jun-2023
16:53:23
Reason: Building Permit
Location: Bidhannagar